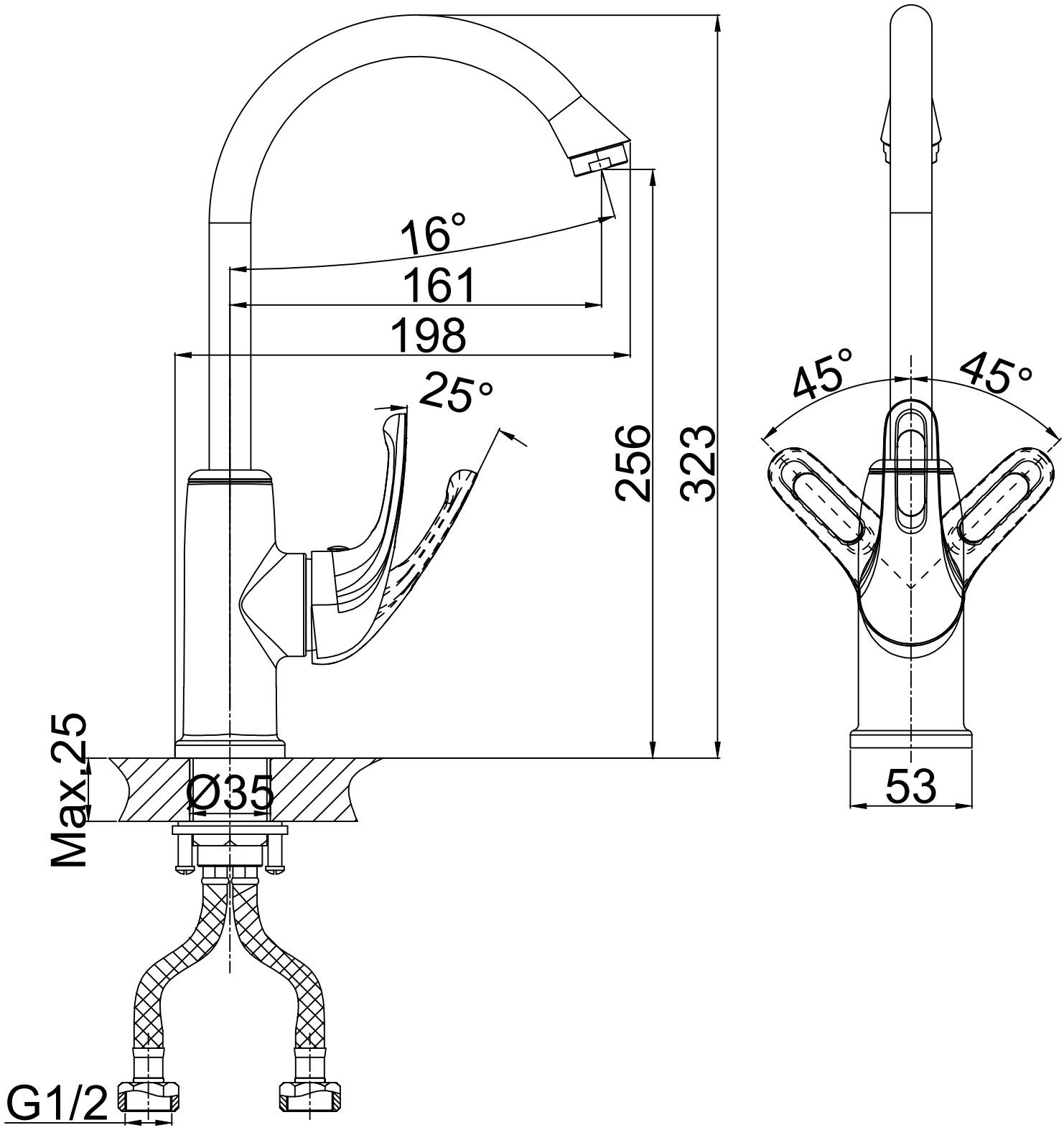

DA1372420